Crush Fixture

TAS733-200

The TAS 733 Fixture is designed for use on a tensile tester as the foundation to perform ring crush, pin adhesion, edge crush, Concora crush and flat crush. The fixture incorporates a guided platen design to ensure compliance with published specifications for parallelism and lateral movement.

	TAS733-200-ISO3037
Max. load:	20 kN
Coupling:	Af159 Further couplings on request
Material:	Steel, hardened, nickel-plated
Guide blocks:	20 x 20 x 100 mm (H x W x L)
Weight:	13.8 kg per fixture incl. guide blocks
Temperature range:	0 … +70°C Further temperature ranges on request
Scope of delivery:	1 fixture incl. 2 guide blocks





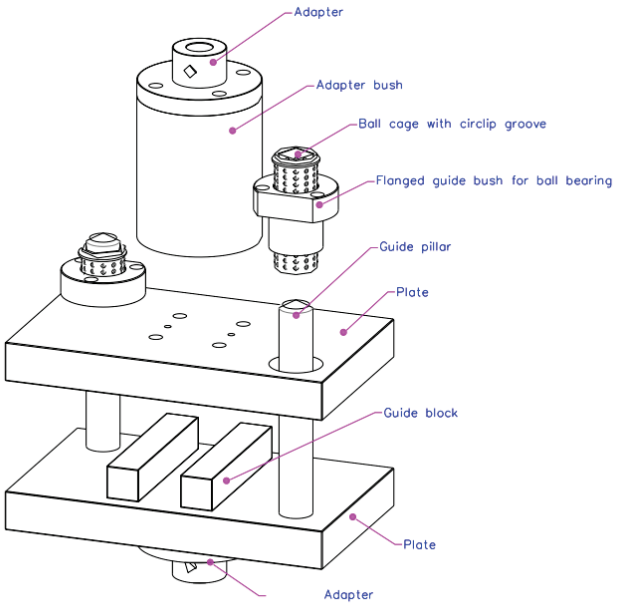

Specific fixtures to meet crush test standards must be ordered separately including but not limited to ring crush, pin adhesion, edge crush, Concora crush and flat crush. These include:

ISO 3035

ISO 3037

ISO 12192-Fig1

TAPPI T822

TAPPI T811

Crush Fixture

TAS733-200

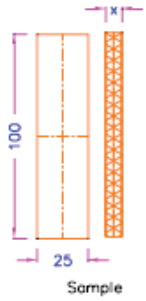

ISO3037

