Pneumatic Light-Weight Grip

TA94 – 200 N

TA94 Pneumatic Grip
Light-Weight, Small Pneumatic Grip



- Clamping force: 200 N / 7 bar
- Opening: 0 - 20 mm (depending on jaws)
- Temperature range: 0°C - +70°C (depending on jaws)
  Other temperature ranges possible on request
- Body: Aluminium, anodized
- Pneumatic connection: M5 pneumatic connection or with additional Adapter (TA205-4-1/8") Pneumatic Micro – hand switches 1/8" connection
- Weight: 240 g per grip (without jaws)
- Scope of delivery: 1 pair of grips. Jaws to be ordered separately.

Jaws for TA94: Scope of delivery 1 set = 4 jaws

Item No.	Surface	Clamping surface H x W	Opening	Weight per pair
TA94-B	Blank jaws	25 x 25mm	0 – 20mm	53 gram
TA94-BG	Rubber jaws	25 x 25mm	0 – 18mm	56 gram
TA94-BP	Pyramid jaws	25 x 25mm	0 – 20mm	49 gram
TA94-BD	Diamond jaws	25 x 25mm	0 – 20mm	54 gram
TA94-B50	Blank jaws	25 x 50mm	0 – 20mm	111 gram
TA94-BG50	Rubber jaws	25 x 50mm	0 – 18mm	114 gram
TA94-BP50	Pyramid jaws	25 x 50mm	0 – 20mm	104 gram
TA94-BW50	Wave jaws	25 x 50mm	0 – 16mm	128 gram
TA94-BD50	Diamond jaws	25 x 50mm	0 – 20mm	112 gram

Jaws with other dimensions and surface coatings on request

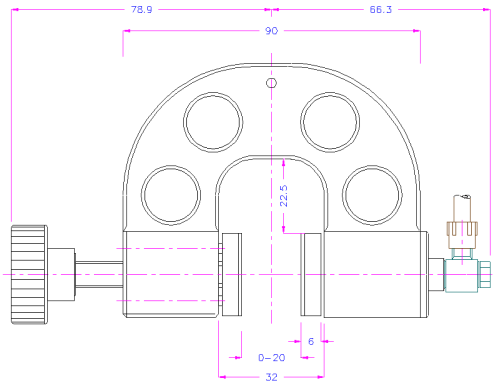

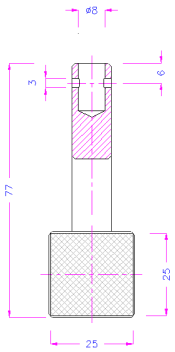

TA94

Blank jaws
- Applicable for own further treatments
- Steel blanks without coating

Rubber jaws
- 1mm rubber coating (NBR)
- Nickel plated

Pyramid jaws
- Pyramids 1x45°
- Hardened steel 58 HRC
- Nickel plated

Wave jaws
- Wave 5 mm
- Hardened steel 58 HRC

Diamond jaws
- Clamping surface coated with synthetic diamonds
- Nickel plated

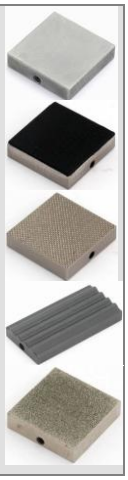

Pneumatic Light-Weight Grip

TA94 – 200 N

Examples for additional special solutions:



TA94 with TA94-BW50 jaws +
TA205-PK23 adapter

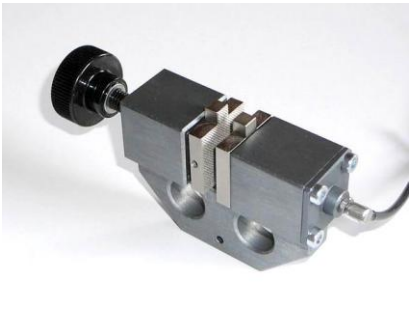

TA94-S2+BP-S21
Reduced height



TA94 with TA94-B100x25 special jaws
Blank jaws: height 100 mm x width 25mm



TA94-HT-B
With pull rod for usage in Temperature Chamber