Pneumatic Grip

TA83 – 4kN

TA83 Pneumatic grip

- Clamping force: 4 kN / 7 bar (10 kN / 16 bar)
- Standard temperature range: 0 °C - +70°C
  Further temperature ranges on request
- Body made of aluminum
- Pneumatic internal thread connection: 1/8”
- Weight 3.2 kg each without jaws
- Scope of supply: 1 pair





Jaws for TA83: Scope of supply: 1 Set = 4 jaws

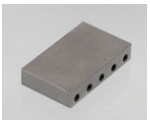

Blank (smooth) jaws
- Suitable for own further treatments
- Steel-blanks without coating

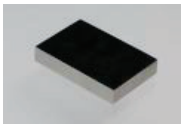

Rubber coated jaws
- 1 mm rubber coating (NBR)
- Nickel-plated

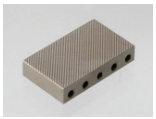

Pyramid jaws (serrated)
- Pyramids 1.2x45
- Hardened steel 58HRC
- Nickel-plated

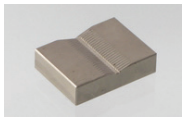

V-jaws
- For all kinds of round samples
- Tooth pitch 1.2 mm
- Hardened steel 58HRC
- Nickel-plated



Wave jaws (corrugated)
- For flexible materials
- Wave 5 mm
- Hardened steel 58HRC
- Nickel-plated



Diamond coated jaws
- Clamping surface coated with synthetic diamonds D91 (170/200 mesh)
- Nickel-plated

Item number	Surface	Clamping surface H x W	Opening	Temperature range	Weight/ 1 pair
TA83-B	Blank jaws	40 x 60 mm	0 – 10 mm	+20 °C ... +180°C	0.35 kg
TA83-BG	Rubber-coated jaws	40 x 60 mm	0 – 8 mm	- 70 °C ... +70°C	0.36 kg
TA83-BP	Pyramid jaws	40 x 60 mm	0 – 10 mm	- 70 °C ... +180°C	0.33 kg
TA83-BV3	V-jaws	Clamping height 40 mm	3 – 10 mm Ø	- 70 °C ... +180°C	0.35 kg
TA83-BV6	V-jaws	Clamping height 40 mm	6 – 10 mm Ø	- 70 °C ... +180°C	0.34 kg
TA83-BW	Wave jaws	40 x 60 mm	0 – 10 mm	- 70 °C ... +180°C	0.40 kg
TA83-BD	Diamond-coated jaws	40 x 60 mm	0 – 10 mm	- 70 °C ... +180°C	0.35 kg
TA83-B100	Blank jaws	40 x 100 mm	0 – 10 mm	+20 °C ... +180°C	0.72 kg
TA83-BG100	Rubber-coated jaws	40 x 100 mm	0 – 3 mm	- 70 °C ... +70°C	0.74 kg
TA83-BP100	Pyramid jaws	40 x 100 mm	0 – 10 mm	- 70 °C ... +180°C	0.69 kg
TA83-BW100	Wave jaws	40 x 100 mm	0 – 10 mm	- 70 °C ... +180°C	0.66 kg
TA83-BD100	Diamond-coated jaws	40 x 100 mm	0 – 10 mm	- 70 °C ... +180°C	0.72 kg

*Rods for openings 10 – 20 mm and 20 – 30 mm are included in the scope of delivery of the grips
**with rods for opening 10 – 20 mm

Pneumatic Grip

TA83 – 4kN

Inset jaws for TA83:
Jaw quick changing system
Inset jaws require carriers (TA83-GT)
Scope of delivery: 1 Set = 4 jaws

Item number	Surface	Clamping surface H x W	Opening*	Temperature range	Weight/ 1 pair
TA83-GT	Carrier for 60 mm wide jaws	-	-	- 70 °C … +180°C	0.33 kg
TA83-EBB	Blank insert jaws	50 x 60 mm	0-9 mm	+20 °C … +180°C	0.29 kg
TA83-EBG	Rubber coated insert jaws	50 x 60 mm	0-7 mm	- 70 °C … +70°C	0.30 kg
TA83-EBP	Pyramid insert jaws	50 x 60 mm	0-9 mm	- 70 °C … +180°C	0.28 kg
TA83-EBV4	V insert jaws	Height 50 mm	4-9 mm	- 70 °C … +180°C	0.29 kg
TA83-EBW	Wave insert jaws	50 x 60 mm	0-9 mm	- 70 °C … +180°C	0.26 kg
TA83-EBD	Diamond coated insert jaws	50 x 60 mm	0-9 mm	- 70 °C … +180°C	0.29 kg
TA83-GT100	Carrier	-	-	- 70 °C … +180°C	0.69 kg
TA83-EB100	Blank insert jaws	50 x 100 mm	0-9 mm	+20 °C … +180°C	0.63 kg
TA83-EBG100	Rubber coated insert jaws	50 x 100 mm	0-3 mm	- 70 °C … +70°C	0.65 kg
TA83-EBP100	Pyramid insert jaws	50 x 100 mm	0-9 mm	- 70 °C … +180°C	0.60 kg
TA83-EBW100	Wave insert jaws	50 x 100 mm	0-9 mm	- 70 °C … +180°C	0.57 kg

*Rods for opening 9–19 mm are included in the scope of delivery of the grips

Jaws with other dimensions and surface coatings on request

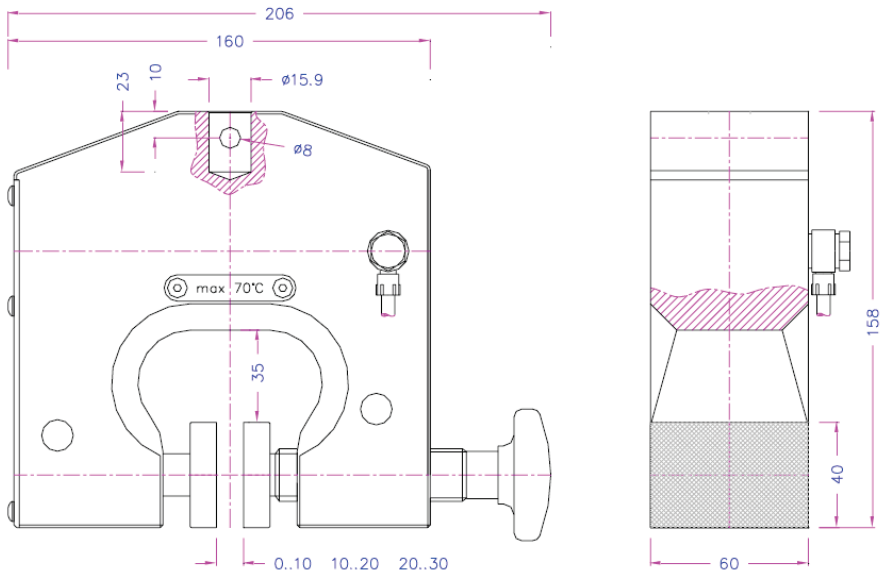



TA83 + TA83-BW200

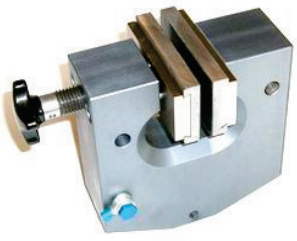

TA83 + TA83-GT100 + TA83-EBG100

Pneumatic Grip

TA83 – 4kN

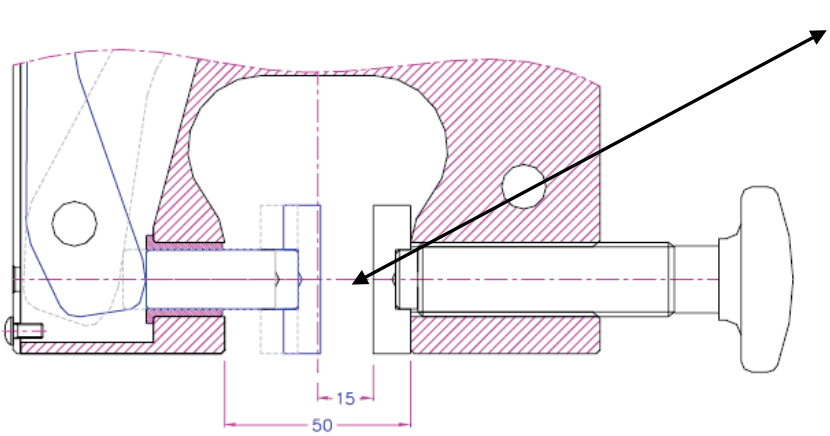

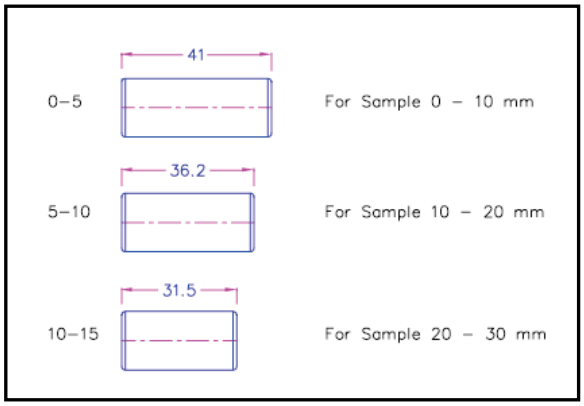

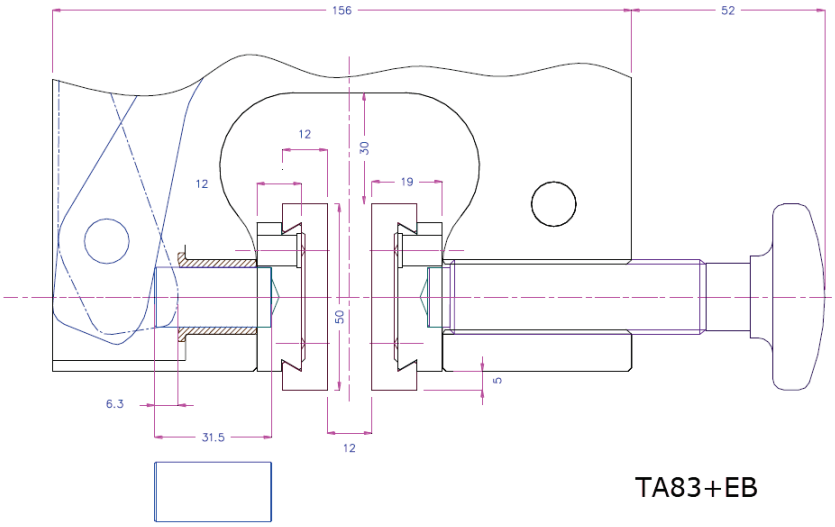

TA83+EB

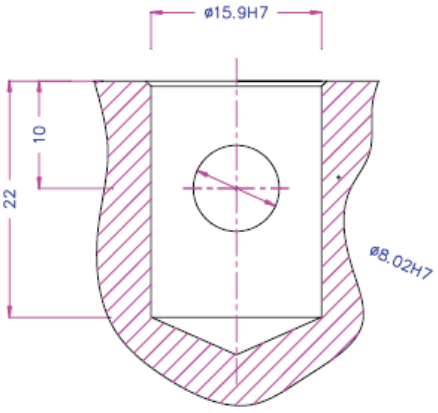

Af159 (5/8")