Vise Grip

TA56g

The TA56g vise grips offer a versatile general-purpose grip applicable for plastics, textiles, paper, steel foils, aluminium, etc.

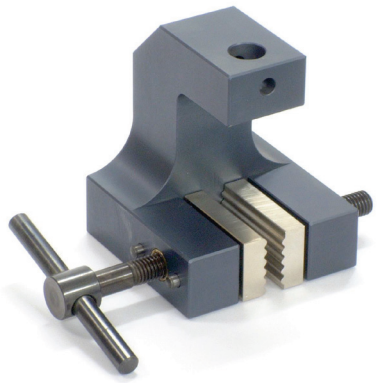

TA56g Vise Grip

Opening: 0 – 15 mm (depending on jaws)
Weight: 2.2 kg per pair (without jaws)
Clamping force: 10 kN at 15 Nm torque

TA56g-H200 Vise grip

Total height: 220 mm
Distance between lower edge of jaws and coupling: 200 mm
Opening: 0 – 42 mm (depending on jaws)
Weight: 3.2 kg per pair (without jaws)

- Jaws adjust to specimen by socket bearing
- Tensile force: 5 kN
- Temperature range: 0°C to +70°C (depending on jaws)
  Other temperature ranges possible on request
- Body: aluminium, anodized
- Scope of delivery: 1 pair without jaws

Also available as a pneumatic grip (see data sheet TA56g+ko)

Jaws for TA56g: Scope of delivery 1 set = 4 jaws

Item No.	Surface	Clamping surface H x W	Opening TA56g	Opening TA56g-H200	Weight per pair
TA56g-B	Blank jaws	30 x 50 mm	0 – 15 mm	0 – 42 mm	0.22 kg
TA56g-BG	Rubber jaws	30 x 50 mm	0 – 13 mm	0 – 40 mm	0.22 kg
TA56g-BP	Pyramid jaws	30 x 50 mm	0 – 15 mm	0 – 42mm	0.21 kg
TA56g-BV2	V-jaws	30 x 50 mm	Ø 2 – 8 mm	Ø 2 – 35 mm	0.22 kg
TA56g-BV5	V-jaws	30 x 50 mm	Ø 5 – 15 mm	Ø 5 – 42 mm	0.21 kg
TA56g-BW	Wave jaws	30 x 50 mm	0 – 15 mm	0 – 42 mm	0.20 kg
TA56g-BD	Diamond jaws	30 x 50 mm	0 – 15 mm	0 – 42 mm	0.22 kg

Jaws with other dimensions and surface coatings on request

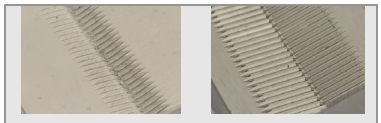

TA56g-BV2 TA56G-BV5
BV5 jaws preferable for samples with larger diameter

Insert jaws for TA56g: Scope of delivery 1 set = 4 jaws
Quick change system - Insert jaws require carriers (TA56g-GT)

Item No.	Surface	Clamping surface H x W	Opening TA56g	Opening TA56g-H200	Weight per pair
TA56g-GT	Carrier	-			0.18 kg
TA56g-EB	Blank insert jaws	30 x 50 mm	0 – 5 mm	0 – 34 mm	0.14 kg
TA56g-EBG	Rubber insert jaws	30 x 50 mm	0 – 3 mm	0 – 32 mm	0.14 kg
TA56g-EBP	Pyramid insert jaws	30 x 50 mm	0 – 5 mm	0 – 34 mm	0.13 kg
TA56g-EBV	V insert jaws	30 x 50 mm	Ø 2 – 10 mm	Ø 2 – 31 mm	0.14 kg
TA56g-EBW	Wave insert jaws	30 x 50 mm	0 – 5 mm	0 – 32 mm	0.12 kg
TA56g-EBD	Diamond insert jaws	30 x 50 mm	0 – 5 mm	0 – 32 mm	0.14 kg

Jaws with other dimensions and surface coatings on request

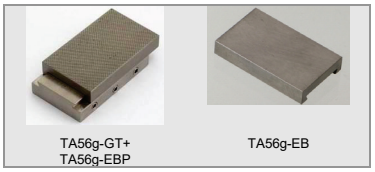

TA56g-GT+ TA56g-EBP TA56g-EB

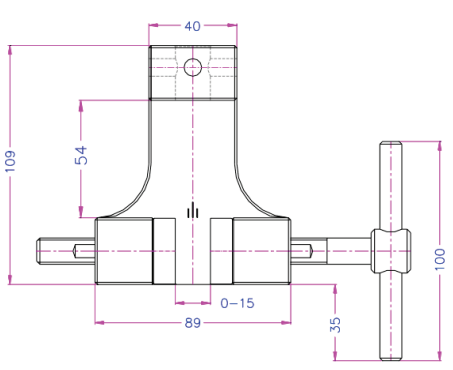

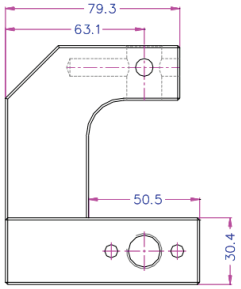

TA56g

Blank jaws
- Suitable for own further treatments
- Steel-blanks without coating

Rubber jaws
- 1mm rubber coating (NBR)
- Nickel-plated

Pyramid jaws
- Pyramid 1.2x45°
- Hardened steel 58 HRC
- Nickel-plated

V-jaws
- For all kinds of round samples
- Tooth pitch 1.2 mm.
- Hardened steel 58 HRC
- Nickel-plated

Wave jaws
- For flexible materials
- Wave 5 mm
- Hardened steel 58 HRC
- Nickel plated

Diamond jaws
- Clamping surface coated with synthetic diamonds
- Nickel-plated

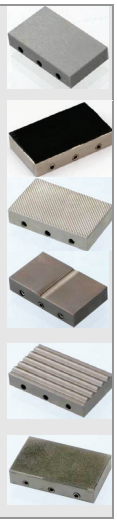

Pneumatic Wedge Grip

TAS1302

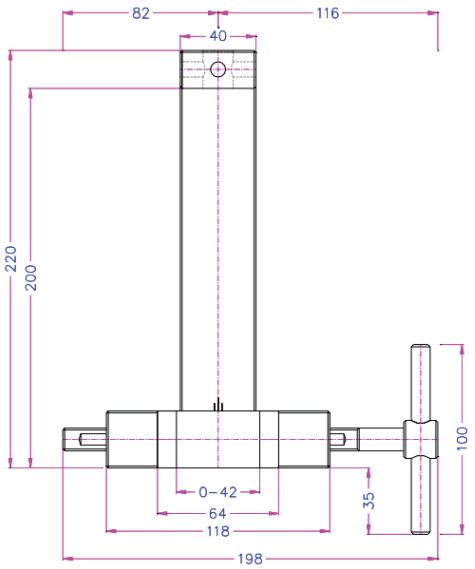

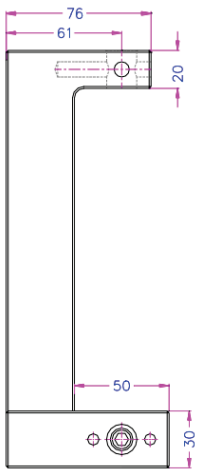

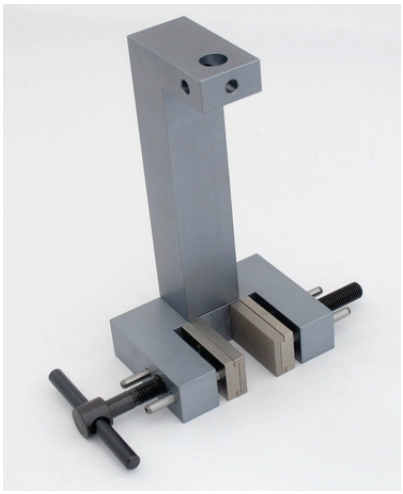

TA56g-H200+GT+EBP

Examples of other versions and custom built solutions

TA56g-H200



TA56g-EI
Optional for TA56g quick-release lever

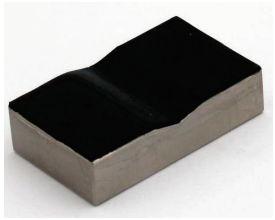

TA56g-BVG
Rubber coated V-jaws

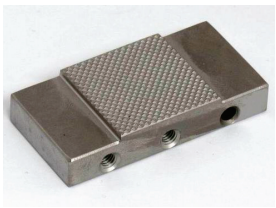

TA56g-BP25x25
Clamping surface 25x25mm

Pneumatic versions (see data sheet TA56g+ko)



TA56g+Ko+BW

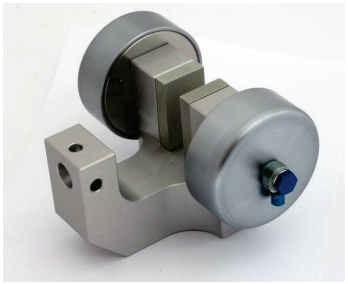

TA56g+2Ko+BP

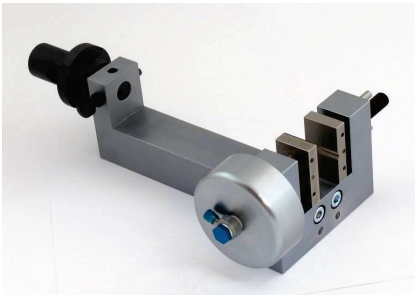

TA56g-H200+Ko+BV
with adapter TAS626-158-317