Square Compression Platen

TA36

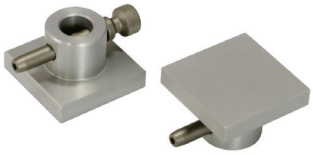

Aluminium compression platens are used to test soft samples such as cardboards, soft plastics, etc.

Steel compression platens are applicable for hard materials e.g. steel, hard plastics, stone etc.

Perforated compression platens are suitable for testing of foam materials.

Part No:	**TA36-AxB-C-AL** (aluminum platens) **TA36-AxB-C-ST** (steel platens) **TA36L-AxB-C-L- AL** (perforated platens)	A = short side B = long side C = adapter size AL = aluminum ST = steel L = holes to let the air out
Standard Coupling:	Female [mm]: Ø 15.9 (5/8"), 20, 30, 31.8 (10/8"), 32, 36, 40 Male [mm]: Ø 31.7 Further couplings on request	
Max. Load:	Depends on coupling size and platen material	
Material:	Aluminum, anodized. Steel, hardened, nickel-plated	
Temperature Range:	-70…+ 180°C (aluminum); -70…+280°C (steel) Further temperature ranges on request	
Scope of Supply:	1 pair of platens includes adapter with a standard coupling	

Aluminum Platens

Part Number	Dimensions	Weight/Platen
TA36-50-AL	50 x 50 mm	0.1 kg
TA36-100-AL	100 x 100 mm	0.51 kg
TA36-120-AL	120 x 120 mm	0.75 kg
TA36-120x180-AL	120 x 180 mm	1.13 kg
TA36-125x250-AL	125 x 250 mm	1.62 kg
TA36-150-AL	150 x 150 mm	1.17 kg
TA36-150x300-AL	150 x 300 mm	2.28 kg
TA36-200-AL	200 x 200 mm	2.10 kg
TA36-200x300-AL	200 x 300 mm	3.39 kg
TA36-250-AL	250 x 250 mm	3.19 kg
TA36-300-AL	300 x 300 mm	4.35 kg
TA36-350-AL	350 x 350 mm	6.60 kg
TA36-400-AL	400 x 400 mm	8.70 kg
Further dimensions and modifications on request.		

Steel Platens

Part Number	Dimensions	Weight/ Platen
TA36-100-ST	100 x 100 mm	1.54 kg
TA36-196-ST	196 x 196 mm	6.60 kg
TA36-200-ST	200 x 200 mm	7.10 kg
TA36-246-ST	246 x 246 mm	10.40 kg
TA36-296-ST	296 x 296 mm	13.60 kg
TA36-396-ST	396 x 396 mm	33.00 kg
Further dimensions and modifications on request.		

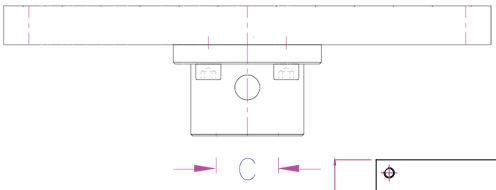

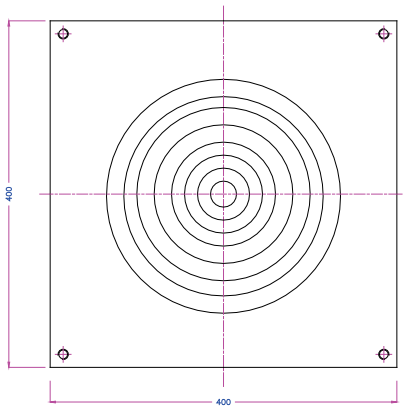



↑ TA-36-250-AL

Square Compression Platen

TA36

Perforated platens

6 mm Ø holes spaced at 20 mm

Item number	Dimensions	Weight/each platen
TA36L-100-L6x20-AL	100 x 100 mm	0.48 kg
TA36L-120-L6x20-AL	120 x 120 mm	0.68 kg
TA36L-150-L6x20-AL	150 x 150 mm	1.10 kg
TA36L-150x220-L6x20-AL	150 x 220 mm	1.63 kg
TA36L-200-L6x20-AL	200 x 200 mm	1.95 kg
TA36L-300-L6x20-AL	300 x 300 mm	4.29 kg
TA36L-390-L6x20-AL	390 x 390 mm	7.43 kg
TA36L-400-L6x20-AL	400 x 400 mm	8.20 kg



TA36L-200-L6x20-AL

