Ribbon Grips

TA252

TA252 RIBBON GRIPS
to test thin narrow webbing, straps and ribbons with a 10kN or 20kN option aviailable.

The sample is wrapped around a self-tightening roller to minimize its slippage.



10 kN Version



20 kN Version

	TA252-40x25-10kN	TA252-40x25-20kN
Max. load:	10 kN	20kN
Max. sample thickness:	2.5 mm (0.098 in)	
Max. sample width:	25 mm (0.98 in)	
Min. sample length:	550 mm (21.7 in)	
Coupling:	Af159 or Af20 Further couplings on request	
Body:	Anodized aluminium (10 kN)	Steel, nickel-plated (20 kN)
Roller:	40 mm (1.57 in) Ø; steel, nickel-plated	
Temperature range:	0 … +70°C Further temperature ranges on request	
Weight:	1.2 kg (10 kN)	2.6 kg (20 kN)
Scope of delivery:	1 pair of grips Specify 10 kN or 20kN when ordering	



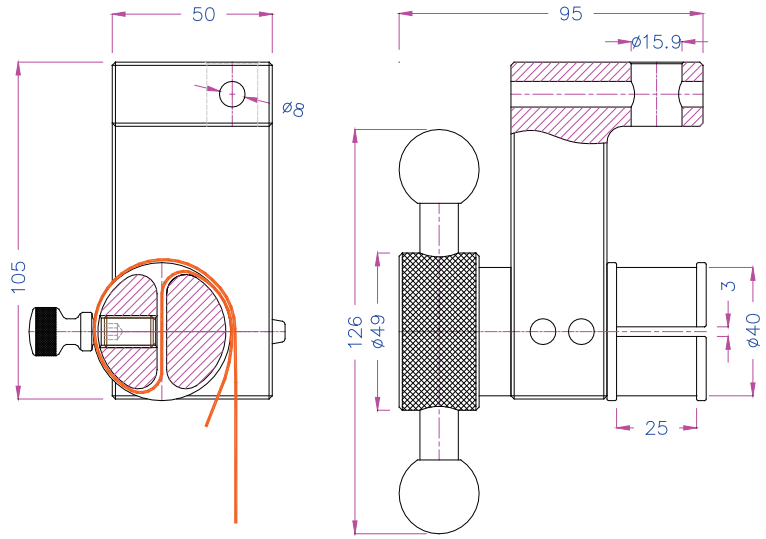

Ribbon Grips

TA252

Ribbon grip with ratchet mechanism to test thin ribbons

	TA252-20x35-RTCH-5kN
Max. load:	5 kN
Max. sample thickness:	1 mm (0.039 in)
Max. sample width:	35 mm (1.38 in)
Min. sample length:	300 mm (11.8 in)
Roller Ø:	20 mm (0.78 in)
Number of ratchet teeth:	28
Coupling:	Af159 or Af20 Further couplings on request
Body:	Anodized aluminium
Ratchet, roller and handle:	Steel, nickel-plated
Temperature range:	0 … +70°C Further temperature ranges on request
Weight:	Ca. 0.8 kg per grip



