Vise Grips

TA240k

TA240k Vise Grip
• Tensile force: 2.5 kN
• Opening: 0 - 10mm (with rubber jaws 0-8 mm)
• Weight: 0.27kg each grip (without jaws)

TA240k-S20 Vise Grip
• Tensile force: 2 kN
• Opening: 0 - 20mm
• Weight: 0.32kg each grip (without jaws)

TA240k-S30 Vise Grip
• Tensile force: 1 kN
• Opening: 0 – 30mm
• Weight: 0.33 kg each grip (without jaws)

TA240k-S50 Vise Grip
• Tensile force: 1 kN
• Opening: 0 - 50mm
• Weight: 0.49kg each grip (without jaws)

- Temperature range: 0°C - +70°C (depending on jaws)
  Other temperature ranges possible on request
- Body: anodized aluminium
- Scope of delivery: 1 pair (without jaws)
- Pneumatic version available see TA240k+ko

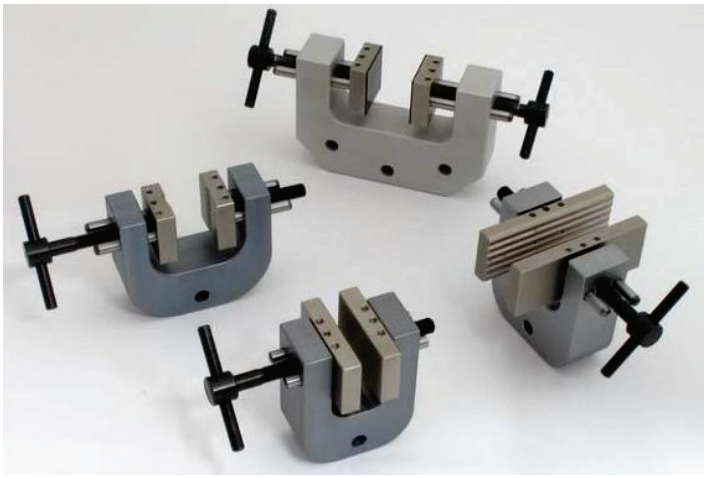

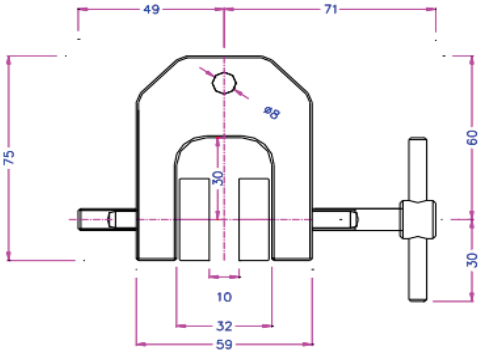

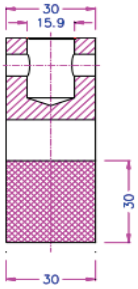

TA240K

TH240k

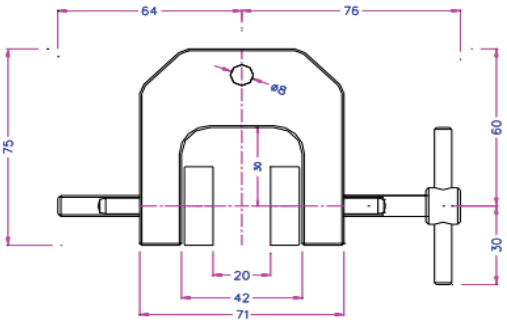

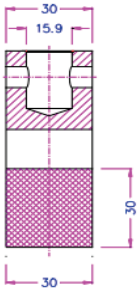

TA240K – S20

Vise Grips

TA240k

Jaws for TA240k Series
Scope of delivery 1 set = 4 jaws

	Surface	Clamping Surface H x W	Opening for TA240k	Opening for TA240k-S20	Opening for TA240k-S30	Opening for TA240k-S50	Weight per pair
TA240k-B25x25	Blank jaws	25 x 25 mm	0 – 10 mm	0 - 20 mm	0 – 30 mm	0 – 52 mm	0.09 kg
TA240k- BG25x25	Rubber jaws	25 x 25 mm	0 – 8 mm	0 - 18 mm	0 – 28 mm	0 – 50 mm	0.12 kg
TA240k-BP25x25	Pyramid jaws	25 x 25 mm	0 – 10 mm	0 - 20 mm	0 – 30 mm	0 – 52 mm	0.08 kg
TA240k- B25.4x25.4	Blank jaws	25.4 x 25.4 mm	0 – 10 mm	0 - 20 mm	0 – 30 mm	0 – 52 mm	0.09 kg
TA240k-BP25.4x25.4	Pyramid jaws	25.4 x 25.4 mm	0 – 10 mm	0 - 20 mm	0 – 30 mm	0 – 52 mm	0.08 kg
TA240k- BG25x75	Rubber jaws	25 x 75 mm	0 – 8 mm	0 - 18 mm	0 – 28 mm	0 – 50 mm	0.29 kg
TA240k-B	Blank jaws	30 x 30 mm	0 – 10 mm	0 - 20 mm	0 – 30 mm	0 – 52 mm	0.13 kg
TA240k-BG	Rubber jaws	30 x 30 mm	0 – 8 mm	0 - 18 mm	0 – 28 mm	0 – 50 mm	0.13 kg
TA240k-BP	Pyramid jaws	30 x 30 mm	0 – 10 mm	0 - 20 mm	0 – 30 mm	0 – 52 mm	0.12 kg
TA240k-BV2	V jaws	30 x 30 mm	Ø 2 – 10 mm	Ø 2- 20 mm	Ø 2- 30 mm	Ø 2 – 52 mm	0.12 kg
TA240k-BV3	V jaws	30 x 30 mm	Ø 3 – 10 mm	Ø 3 – 20 mm	Ø 3 - 30 mm	Ø 3 – 52 mm	0.13 kg
TA240k-BW	Wave jaws	30 x 30 mm	0 – 10 mm	0 - 20 mm	0 – 30 mm	0 – 52 mm	0.12 kg
TA240k-BD	Diamond jaws	30 x 30 mm	0 – 10 mm	0 - 20 mm	0 – 30 mm	0 – 52 mm	0.13 kg
TA240k-BLC*	Line-contact jaws	30 x 30 mm	0 – 6 mm	0 – 16 mm	0 – 26 mm	0 – 48 mm	0.13 kg
TA240k-B50	Blank jaws	30 x 50 mm	0 – 10 mm	0 - 20 mm	0 – 30 mm	0 – 52 mm	0.22 kg
TA240k-BG50	Rubber jaws	30 x 50 mm	0 – 8 mm	0 - 18 mm	0 – 28 mm	0 – 50 mm	0.23 kg
TA240k-BP50	Pyramid jaws	30 x 50 mm	0 – 10 mm	0 - 20 mm	0 – 30 mm	0 – 52 mm	0.21 kg
TA240k-BW50	Wave jaws	30 x 50 mm	0 – 10 mm	0 - 20 mm	0 – 30 mm	0 – 52 mm	0.20 kg
TA240k-BD50	Diamond jaws	30 x 50 mm	0 – 10 mm	0 - 20 mm	0 – 30 mm	0 – 52 mm	0.22 kg
TA240k-B80	Blank jaws	30 x 80 mm	0 – 10 mm	0 - 20 mm	0 – 30 mm	0 – 52 mm	0.36 kg
TA240k-BG80	Rubber jaws	30 x 80 mm	0 – 8 mm	0 - 18 mm	0 – 28 mm	0 – 50 mm	0.37 kg
TA240k-BP80	Pyramid jaws	30 x 80 mm	0 – 10 mm	0 - 20 mm	0 – 30 mm	0 – 52 mm	0.35 kg
TA240k-BW80	Wave jaws	30 x 80 mm	0 – 10 mm	0 - 20 mm	0 – 30 mm	0 – 52 mm	0.32 kg
TA240k-BD80	Diamond jaws	30 x 80 mm	0 – 10 mm	0 - 20 mm	0 – 30 mm	0 – 52 mm	0.36 kg
TA240k-B100	Blank jaws	30 x 100 mm	0 – 10 mm	0 - 20 mm	0 – 30 mm	0 – 52 mm	0.45 kg
TA240k-BG100	Rubber jaws	30 x 100 mm	0 – 8 mm	0 - 18 mm	0 – 28 mm	0 – 50 mm	0.46 kg
TA240k-BP100	Pyramid jaws	30 x 100 mm	0 – 10 mm	0 - 20 mm	0 – 30 mm	0 – 52 mm	0.45 kg
TA240k-BP100- A4	Pyramid jaws, stainless steel	30 x 100 mm	0 – 10 mm	0 - 20 mm	0 – 30 mm	0 – 52 mm	0.45 kg
TA240k-BW100	Wave jaws	30 x 100 mm	0 – 10 mm	0 - 20 mm	0 – 30 mm	0 – 52 mm	0.51 kg
TA240k-BD100	Diamond jaws	30 x 100 mm	0 – 10 mm	0 - 20 mm	0 – 30 mm	0 – 50 mm	0.45 kg
TA240k-B50	Blank jaws	50 x 50 mm	0 – 10 mm	0 - 20 mm	0 – 30 mm	0 – 52 mm	0.23 kg
TA240k- B50.8x50.8	Blank jaws	50.8 x 50.8 mm	0 – 10 mm	0 - 20 mm	0 – 30 mm	0 – 52 mm	0.24 kg

*Scope of delivery TA240k-BLC: 1 set = 2 x TA240k-BG + 2 x TA240k-BLC jaws

Vise Grips

TA240k

Insert jaws for TA240k
Scope of delivery 1 set = 4 jaws
For a quick change of jaws, insert jaws require carriers.

Carriers		Weight per pair
TA240k-GT30	Carrier for insert jaws 30x30 mm, 30x50 mm	0.09 kg
TA240k-GT50	Carrier for insert jaws 30x50 mm, 30x100 mm	0.18 kg



Insert Jaws	Surface	Clamping Surface H x W	Opening for TA240k	Opening for TA240k-S20	Opening for TA240k-S30	Opening for TA240k-S50	Weight per pair
TA240k-EB	Blank insert jaws	30 x 30 mm	0 – 8 mm	0 - 18 mm	0 – 28 mm	0 – 50 mm	0.05 kg
TA240k-EBG	Rubber insert jaws	30 x 30 mm	0 – 6 mm	0 - 16 mm	0 – 26 mm	0 – 48 mm	0.06 kg
TA240k-EBP	Pyramid insert jaws	30 x 30 mm	0 – 8 mm	0 - 18 mm	0 – 28 mm	0 – 50 mm	0.05 kg
TA240k-EBW	Wave insert jaws	30 x 30 mm	0 – 8 mm	0 - 18 mm	0 – 28 mm	0 – 50 mm	0.05 kg
TA240k-EBD	Diamond insert jaws	30 x 30 mm	0 – 8 mm	0 - 18 mm	0 – 28 mm	0 – 50 mm	0.06 kg
TA240k-EB50	Blank insert jaws	30 x 50 mm	0 – 4 mm	0 – 14 mm	0 – 24 mm	0 – 46 mm	0.14 kg
TA240k-EBG50	Rubber insert jaws	30 x 50 mm	0 – 2 mm	0 – 12 mm	0 – 22 mm	0 – 44 mm	0.14 kg
TA240k-EBP50	Pyramid insert jaws	30 x 50 mm	0 – 4 mm	0 – 14 mm	0 – 24 mm	0 – 46 mm	0.13 kg
TA240k-EBV3	V insert jaws	30 x 50 mm	Ø 3 – 4 mm	Ø 3 – 14 mm	Ø 3 – 24 mm	Ø 3 – 46 mm	0.13 kg
TA240k-EBW50	Wave insert jaws	30 x 50 mm	0 – 4 mm	0 – 14 mm	0 – 24 mm	0 – 46 mm	0.12 kg
TA240k-EBD50	Diamond insert jaws	30 x 50 mm	0 – 4 mm	0 – 14 mm	0 – 24 mm	0 – 46 mm	0.14 kg
TA240k-EB100	Blank insert jaws	30 x 100 mm	-	0 – 6 mm	0 – 16 mm	0 – 38 mm	0.37 kg
TA240k-EBG100	Rubber insert jaws	30 x 100 mm	-	0 – 4 mm	0 – 14 mm	0 – 36 mm	0.38 kg
TA240k-EBP100	Pyramid insert jaws	30 x 100 mm	-	0 – 6 mm	0 – 16 mm	0 – 38 mm	0.34 kg
TA240k-EBW100	Wave insert jaws	30 x 100 mm	-	0 – 6 mm	0 – 16 mm	0 – 38 mm	0.34 kg
TA240k-EBD100	Diamond insert jaws	30 x 100 mm	-	0 – 6 mm	0 – 16 mm	0 – 38 mm	0.37 kg



Blank jaws
- Applicable for own further treatments
- Steel-blanks without coating
- Nickel-plated



Rubber jaws
- 1 mm rubber coating (NBR)
- Nickel-plated
- 30°C..+70°C



V jaws TA240k-BV2
- For all kinds of round samples
- Tooth pitch 0.8 mm
- Hardened steel 58HRC
- Nickel-plated



Pyramid jaws
- Pyramids 1.2x45°
- Hardened steel 58 HRC
- Nickel-plated



Diamond jaws
- Clamping surface coated with synthetic diamonds D91 (170/200 mesh)
- Nickel-plated

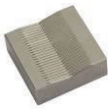

V jaws TA240k-BV3
- For all kinds of round samples
- Tooth pitch 1 mm
- Hardened steel 58HRC
- Nickel-plated



Wave jaws
- For flexible materials
- Wave 5 mm
- Hardened steel 58HRC
- Nickel-plated



Line-contact jaws
- Radius 3
- Nickel-plated