Capstan Rope Grip

TA170-50 – 50kN

TA170-50 Capstan Rope Grip 50kN

TA170 grips are applicable for ropes and ribbons with max. load from 50 kN to 300 kN.

According to its friction coefficient, the specimen will be twisted one or more times around the guide roller, before being fixed with clamping jaws.

The guide rollers generate a slow notch free stress relief to prevent the breakage of the specimen in the clamping area.

Other available versions:
- Modified diameter of the guide roller
- 100kN, 150kN, 200KN versions
- Hydraulic versions

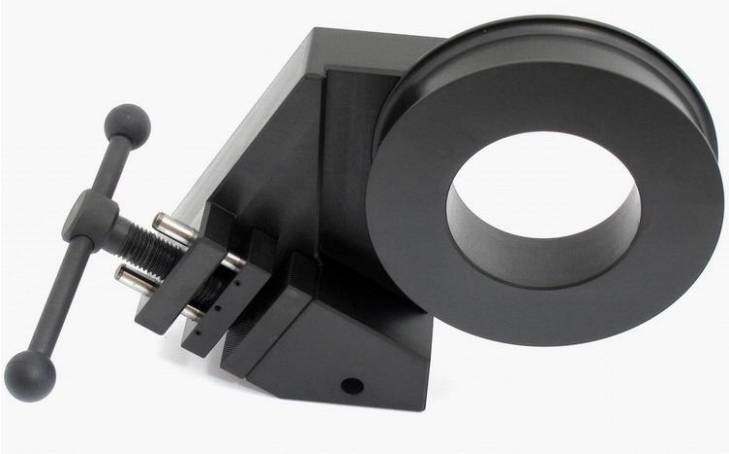

	TA170-50
Applicable for	Ropes, ribbons up to 50kN
Tensile force	50 kN
Recommended rope diameter	5 – 20 mm Ø
Ribbons maximal width	12 mm
Minimal specimen length	1500 mm
Jaws surfaces	Pyramid jaws, 1.2 x 45°, 58HRC Other surfaces on request
Jaws clamping surface HxW	70x30 mm
Ø Guide roller	162 mm Ø
Temperature range*	0°C – 70°C Other temperature ranges on request
Body	Steel, nickel-plated
Weight	13.9 kg each grip
Ordering information/ Scope of delivery	1 pair of grips without jaws



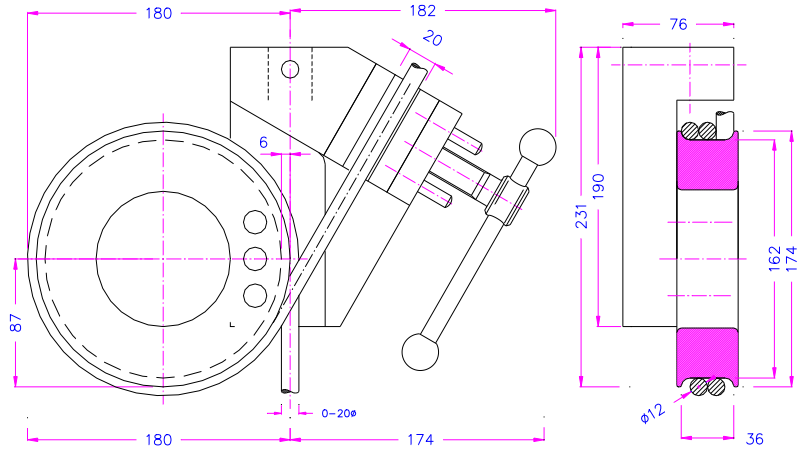

Capstan Rope Grip

TA170-50 – 50kN



TA170-250+Ko
Hydraulic capstan rope grip
Tensile force: 250 kN



TA170-50-D296-B38R6+BP-Af36.18
Bollard Ø 296 mm, width 38 mm



TA170-100-T180-Af318-ni-rot45100kN
Temperature range up to +180°C