Scissor Grips

TA11

Select from 2, 5, 20 or 50 kN

Self-tightening and self-aligning grips

The initial grip is provided by spring tension. The ratio of clamping force to tensile force changes according to the opening width. The larger the opening width the stronger the grips tighten the specimen. The jaws tighten themselves during force application.

TA11-5 Scissor grips

Item No.	TA11-5
Tensile force	5 kN
Opening	0 – 19 mm
Sample width	50 mm
Body	Stainless steel
Temperature range	-70 up to +130°C Other temperature ranges on request
Weight	980 gram each grip (without jaws)

Jaws for TA11-5

Item number	Surface	Clamping surface H x W	Weight per pair
TA11-5-B	Blank (smooth) jaws	20x50 mm	240 gram
TA11-5-BP	Pyramid (serrated) jaws	20x50 mm	240 gram

Other surfaces on request



Blank jaws (smooth)
- Suitable for own further treatments
- Steel blanks without coating

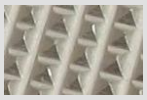

BP –multi-purpose application range
- Pyramid (serrated) jaws 1.2x45°
- Hardened steel 58HRC, nickel plated



TA11-5 with TA11-5-BP jaws

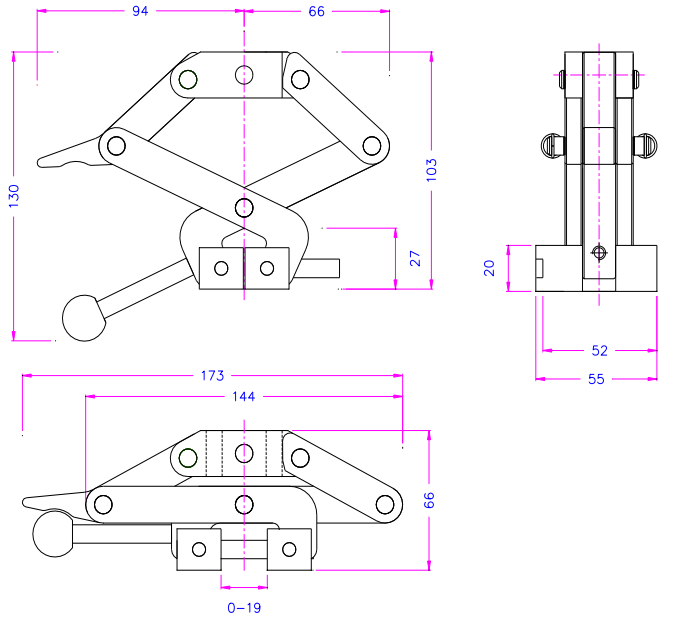



Ordering information

TA11-5 grips are supplied as a pair but can also be ordered separately (0.5 pair). Grips and jaws need to be ordered separately.

Scissor Grips

TA11

TA11-20 Scissor grips

With locking function (snap in): the grip locks in the opened position.
(Not by use of round jaws)

• Item No.	TA11-20
• Tensile force	20 kN
• Opening	Flat jaws 0 – 25 mm Round jaws 0 – 20 mm V-jaws for round specimen: 4 – 16 mm Ø
• Sample width	50 mm and 100 mm
• Body	Stainless steel
• Temperature range	-70 up to +130°C Other temperature ranges on request
• Weight	2 kg each grip (without jaws)



TA11-20 with
TA11-20-BW100 jaws

Jaws for TA11-20

Item number	Surface	Clamping surface H x W	Weight per pair
TA11-20-B	Blank (smooth) jaws	25x50 mm	0.34 kg
TA11-20-BP	Pyramid (serrated) flat jaws	25x50 mm	0.33 kg
TA11-20-BPR*	Pyramid (serrated) round jaws	Ø 25 mm x 52 mm	0.31 kg
TA11-20-BV	V-jaws for round specimen	Samples 4-15 mm Ø	0.45 kg
TA11-20-BW	Wave jaws	25x50 mm	0.32 kg
TA11-20-B100**	Blank (smooth) jaws	25x100 mm	0.74 kg
TA11-20-BP100**	Pyramid (serrated) flat jaws	25x100 mm	0.72 kg
TA11-20-BW100**	Wave jaws	25x100 mm	0.69 kg

Other surfaces on request

* Round jaws are applicable for dumbbell-shaped specimen (bone shaped samples).
**By use of 100 mm width jaws tensile force is reduced to 10kN.



B - Blank (smooth) jaws
- Suitable for own further treatments
- Steel blanks without coating



BP – Multipurpose application range
- Pyramid (serrated) jaws 1.2x45°
- Hardened steel58HRC, nickel plated

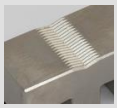

BV-jaws- for all kinds of round samples
- Tooth pitch 1.2 mm
- Hardened steel 58 HRC, nickel plated

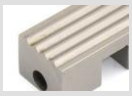

BW Wave jaws – For textile specimen
- Wave 5mm
- Hardened steel 58 HRC, nickel plated

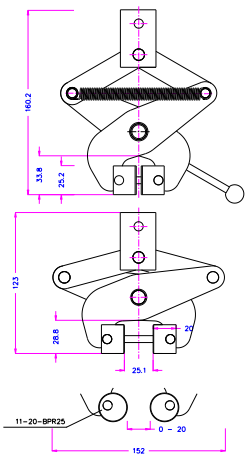

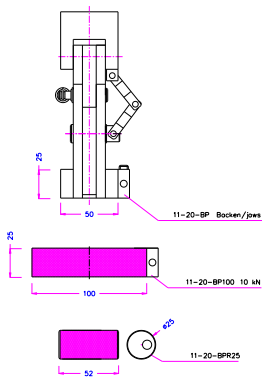



TA11-20 with TA11-20-BR jaws

Ordering information
TA11-20 grips are supplied as a pair, but can also be ordered separately (0.5 pair).
Grips and jaws need to be ordered separately.

Scissor Grips

TA11

TA11-50 Scissor grips

With locking function (snap in): the grip locks in the opened position.

• Item No.:	TA11-50
• Tensile force:	50 kN
• Opening	Flat jaws 0 – 48 mm V-jaws for round specimen: 10 - 48 mm Ø
• Sample width	100 mm
• Body	Steel, manganese phosphate coating
• Temperature range	0 up to +130°C Other temperature ranges on request
• Weight	9.1 kg each grip (without jaws)

Jaws for TA11-50

Item number	Surface	Clamping surface H x B	Weight per pair
TA11-50-BP	Pyramid (serrated) jaws	50x100 mm	1.9 kg
TA11-50-BV10	V-jaws	Samples 10-48 mm Ø	2.0 kg

Other surfaces on request



BP Pyramid jaws
- Pyramid (serrated) jaws 1.2x45°
- Hardened steel 58 HRC, nickel plated



BV-jaws- for all kinds of round samples
- Tooth pitch 1.2 mm
- Hardened steel 58 HRC, nickel plated

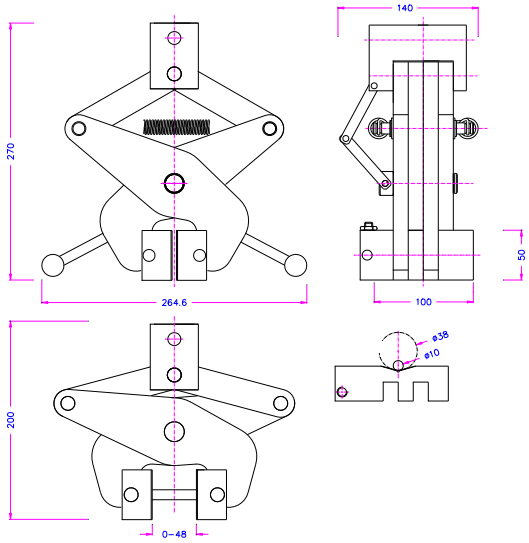



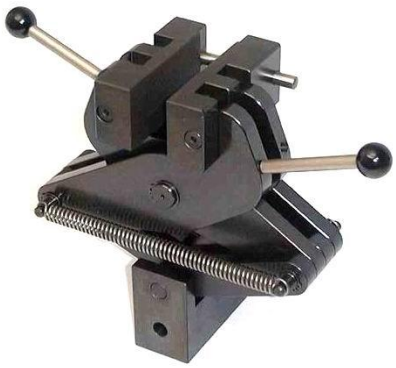

TA11-50 with TA11-50-BP jaws

Additional Scissor Grips:



TA230 Scissor grip

Tensile force 2 kN

Ordering information
TA11-50 grips are supplied as a pair but can also be ordered separately (0.5 pair).
Grips and jaws need to be ordered separately.